Cambridge International AS & A Level

Cambridge International Examinations
Cambridge International Advanced Subsidiary and Advanced Level

CANDIDATE NAME	
CENTRE NUMBER	
CANDIDATE NUMBER	

1996370832

PHYSICS **9702/52**

Paper 5 Planning, Analysis and Evaluation **October/November 2016**

1 hour 15 minutes

Candidates answer on the Question Paper.

No Additional Materials are required.

READ THESE INSTRUCTIONS FIRST

Write your Centre number, candidate number and name on all the work you hand in.
Write in dark blue or black pen.
You may use an HB pencil for any diagrams or graphs.
Do not use staples, paper clips, glue or correction fluid.
DO **NOT** WRITE IN ANY BARCODES.

Answer **all** questions.

Electronic calculators may be used.
You may lose marks if you do not show your working or if you do not use appropriate units.

At the end of the examination, fasten all your work securely together.
The number of marks is given in brackets [ ] at the end of each question or part question.

This document consists of **8** printed pages.

© UCLES 2016

CAMBRIDGE International Examinations

1 A student uses a Hall probe to investigate the magnetic flux density due to a U-shaped electromagnet, as shown in Fig. 1.1.

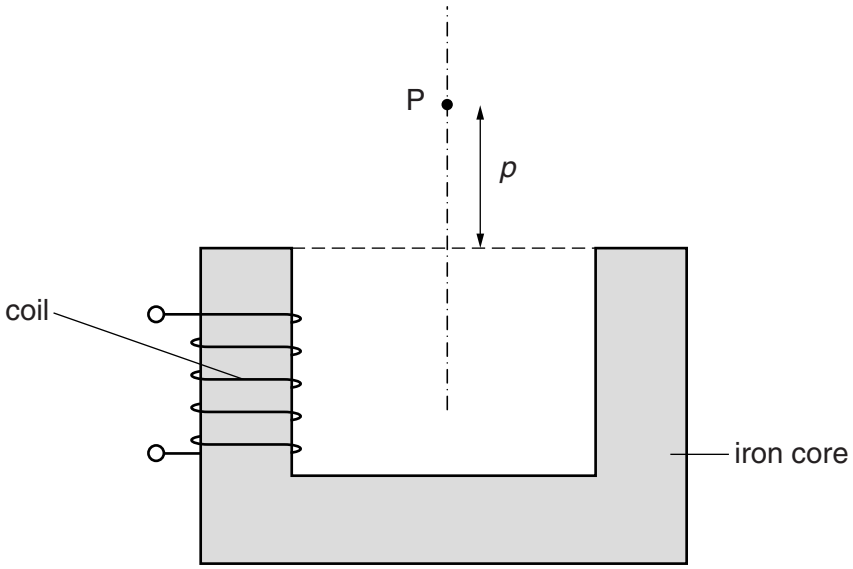

Fig. 1.1

Point P is equidistant from the poles of the electromagnet and distance p is the vertical distance between P and the top of the electromagnet. The magnetic flux density is B at point P.

It is suggested that the relationship between B and p is

$$B = kNIe^{-\alpha p}$$

where N is the number of turns on the coil, I is the current in the coil and α and k are constants.

Design a laboratory experiment using a Hall probe to test the relationship between B and p. Explain how your results could be used to determine values for α and k. You should draw a diagram, on page 3, showing the arrangement of your equipment. In your account you should pay particular attention to

- the procedure to be followed,
- the measurements to be taken,
- the control of variables,
- the analysis of the data,
- any safety precautions to be taken.

[15]

© UCLES 2016

Diagram

.....

.....

.....

.....

.....

.....

.....

.....

.....

.....

.....

.....

.....

.....

[Total: 15]

2 A student is investigating the characteristics of different light-emitting diodes (LEDs). Each LED needs a minimum potential difference across it to emit light.

The circuit is set up as shown in Fig. 2.1.

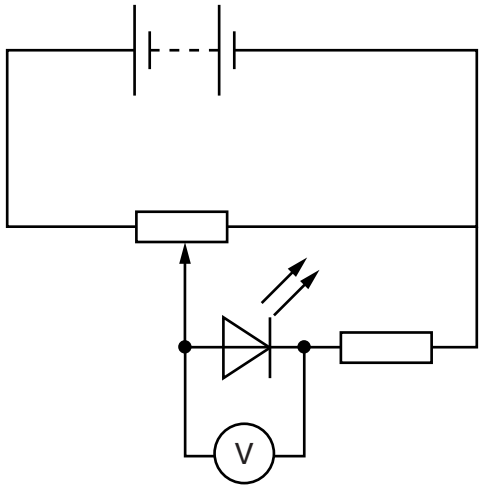

Fig. 2.1

The potentiometer is adjusted until the LED just emits light. The potential difference V across the LED is measured.

The experiment is repeated for LEDs that emit light of different wavelength λ.

It is suggested that V and λ are related by the equation

$$V = p\lambda^q$$

where p and q are constants.

(a) A graph is plotted of $\lg V$ on the y-axis against $\lg \lambda$ on the x-axis.

Determine expressions for the gradient and y-intercept.

gradient = ...

y-intercept = ...
[1]

(b) Values of λ and V are given in Fig. 2.2.

$\lambda / 10^{-9}$ m	V/V	lg ($\lambda / 10^{-9}$ m)	lg (V/V)
630	1.9 ± 0.1		
620	2.0 ± 0.1		
590	2.3 ± 0.1		
520	3.1 ± 0.1		
490	3.7 ± 0.1		
470	4.1 ± 0.1		

Fig. 2.2

Calculate and record values of lg ($\lambda / 10^{-9}$ m) and lg (V/V) in Fig. 2.2.
Include the absolute uncertainties in lg (V/V). [3]

(c) (i) Plot a graph of lg (V/V) against lg ($\lambda / 10^{-9}$ m).
Include error bars for lg (V/V). [2]

(ii) Draw the straight line of best fit and a worst acceptable straight line on your graph.
Both lines should be clearly labelled. [2]

(iii) Determine the gradient of the line of best fit. Include the absolute uncertainty in your answer.

gradient = ... [2]

© UCLES 2016

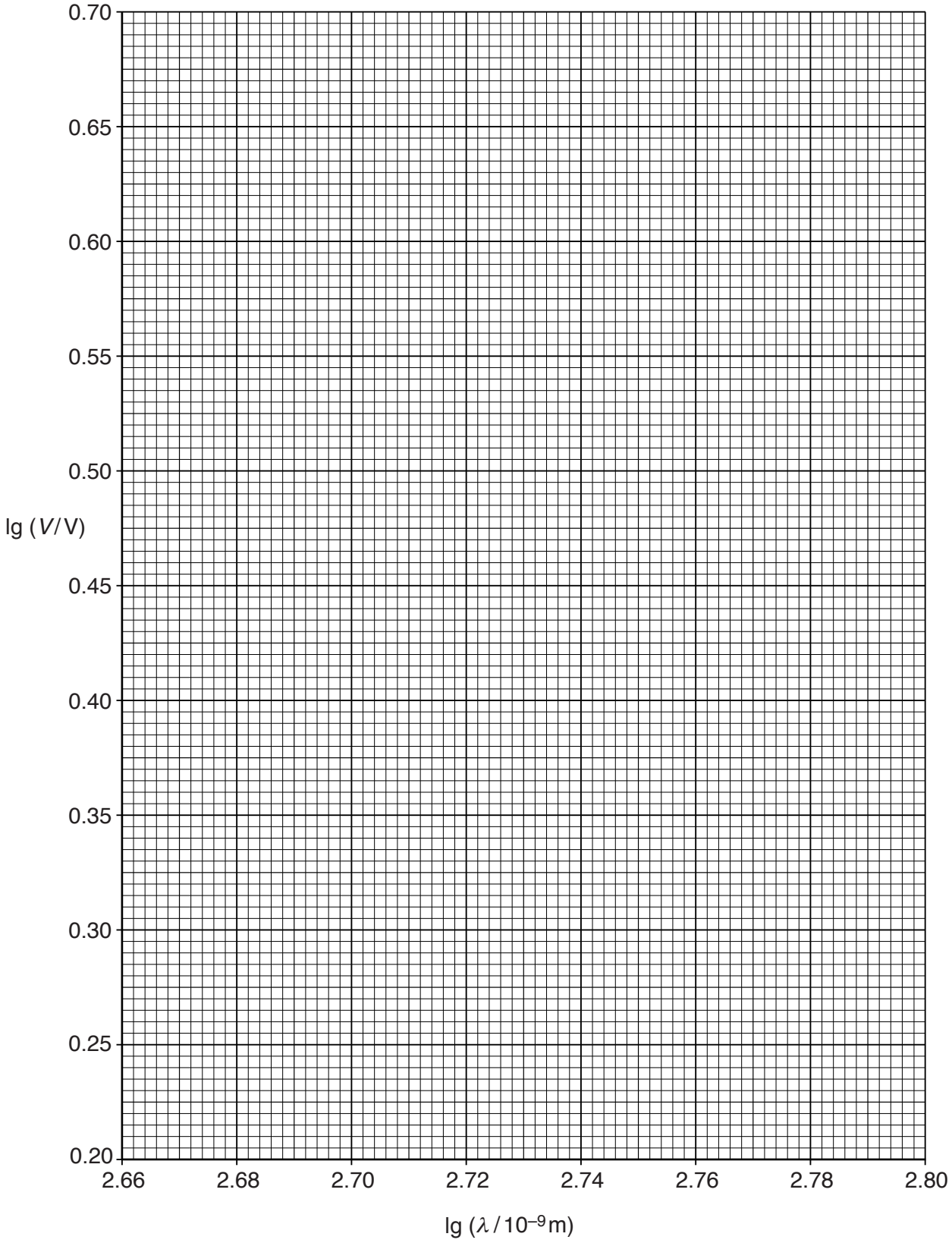
0.70
0.65
0.60
0.55
0.50
lg (V/V)
0.45
0.40
0.35
0.30
0.25
0.20
2.66
2.68
2.70
2.72
2.74
2.76
2.78
2.80
lg (λ/10⁻⁹m)

(iv) Determine the *y*-intercept of the line of best fit. Include the absolute uncertainty in your answer.

y-intercept = ... [2]

(d) Using your answers to **(a)**, **(c)(iii)** and **(c)(iv)**, determine the values of *p* and *q*. You need not be concerned with units.

p = ...

q = ...
[2]

(e) A similar experiment is carried out with a diode emitting infra-red radiation of wavelength 950 nm. Determine the minimum potential difference *V* needed to emit this radiation.

V = ... V [1]

[Total: 15]

To avoid the issue of disclosure of answer-related information to candidates, all copyright acknowledgements are reproduced online in the Cambridge International Examinations Copyright Acknowledgements Booklet. This is produced for each series of examinations and is freely available to download at www.cie.org.uk after the live examination series.

© UCLES 2016